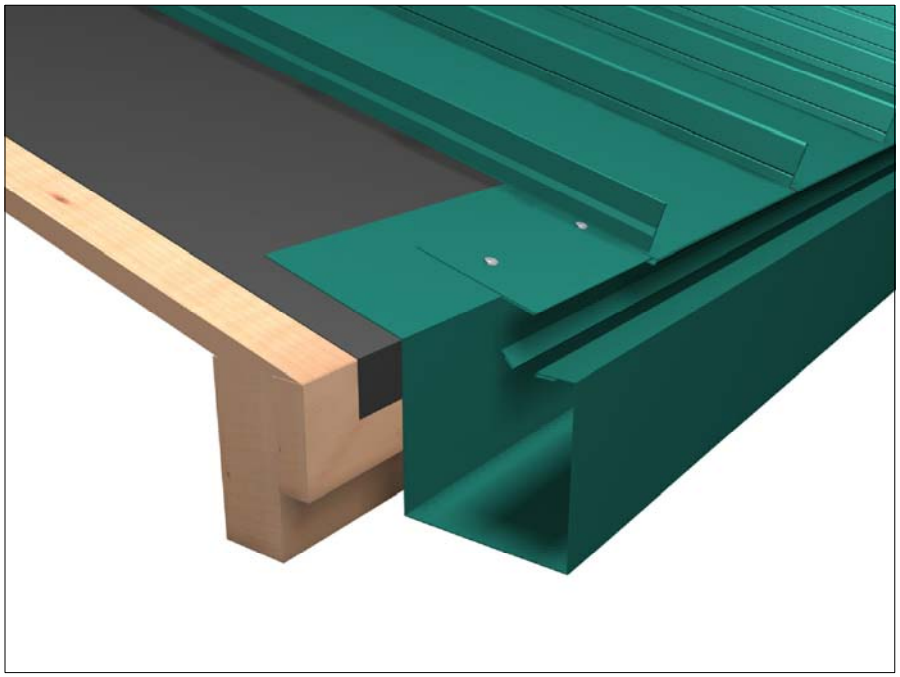

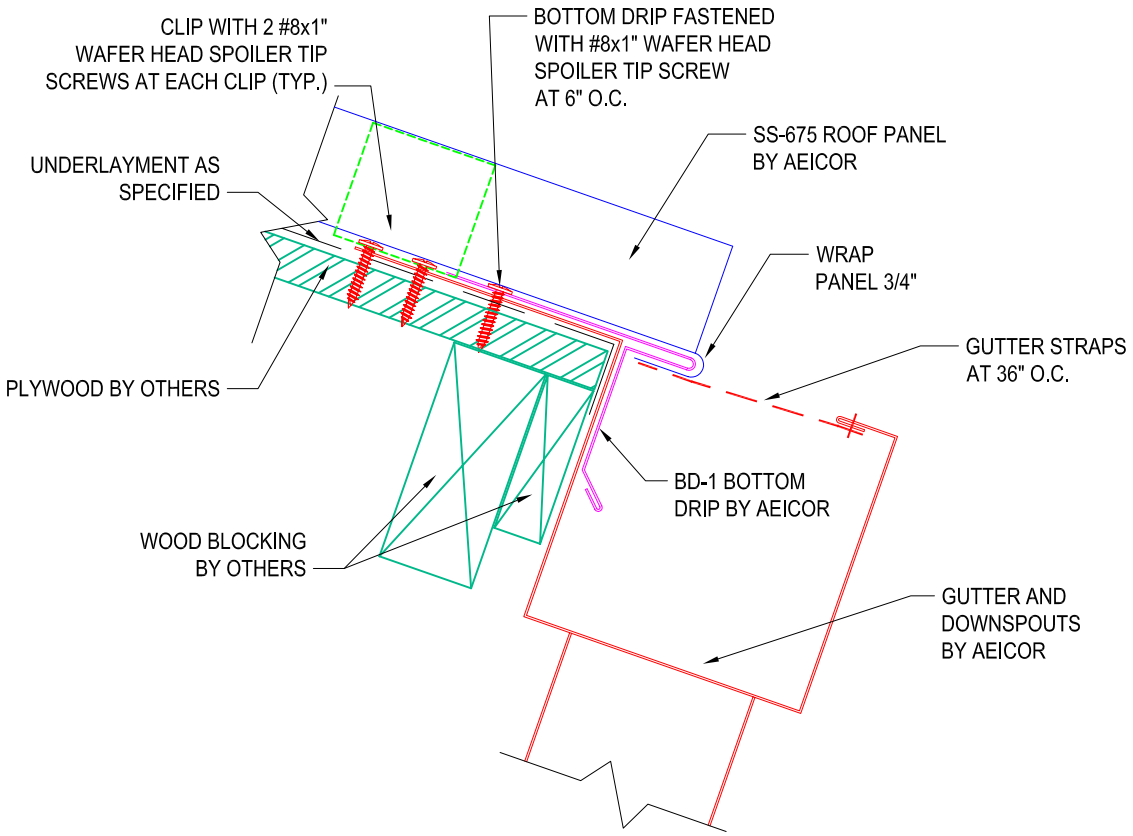

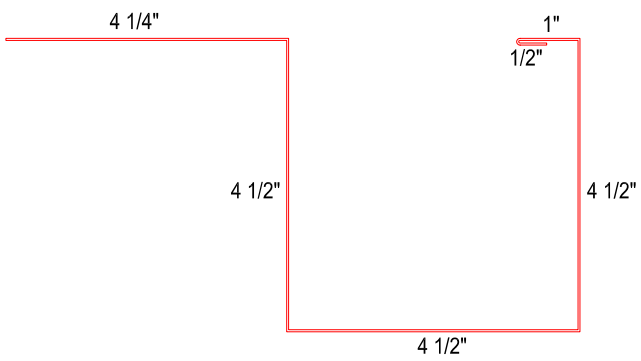

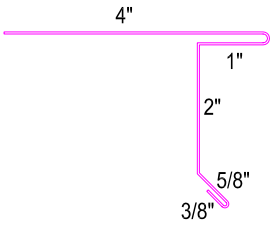

AEICOR METAL PRODUCTS
(A DIVISION OF SOUTHERN METAL PRODUCTS)

SS-675 STANDING SEAM SYSTEM

EAVE / GUTTER DETAIL